3422

Leaf Pintel - 1.25" Offset

304 Stainless Steel, Black Powder Coated

New Horizon Shutters International, LLC
www.NewHorizonShutters.com | 843-797-7762

Do not scale drawing. All dimensions are nominal (+/- 1/8") and for reference only. Specifications and dimensions are subject to change without notice. 11/29/2016

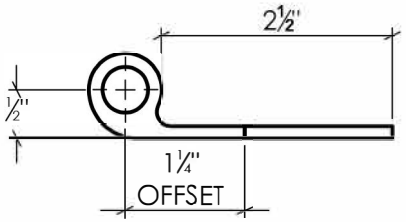

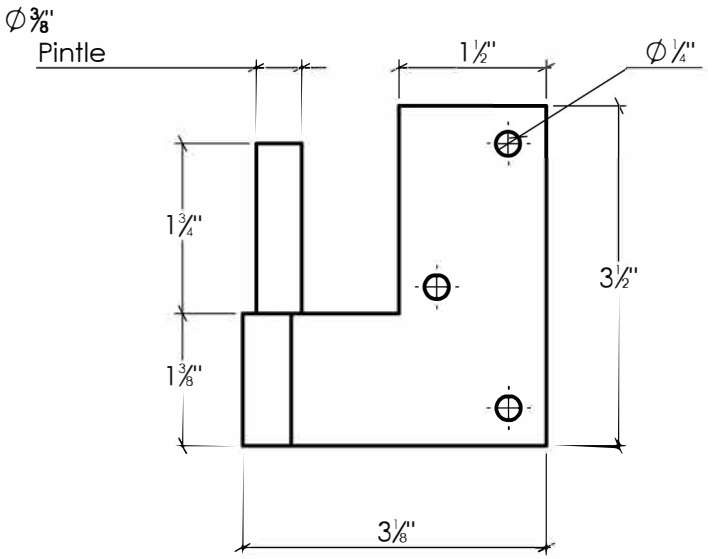

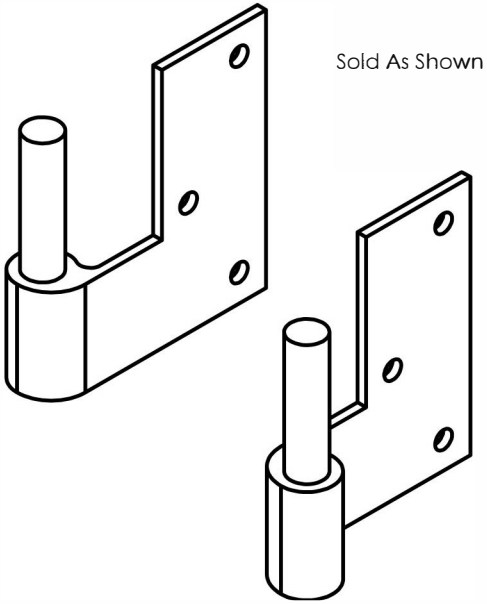

Sold As Shown